XIX IMEKO World Congress
Fundamental and Applied Metrology
September 6–11, 2009, Lisbon, Portugal

EXPERIMENTAL INVESTIGATIONS OF VAN DER PAUW METHOD APPLIED FOR MEASURING ELECTRICAL CONDUCTIVITY OF LIQUIDS

Zbigniew Moroń [1], *Tomasz Grysiński* [2]

[1] Institute of Biomedical Engineering and Instrumentation, Wrocław University of Technology, Wrocław, Poland, Zbigniew.Moron@pwr.wroc.pl
[2] Institute of Biomedical Engineering and Instrumentation, Wrocław University of Technology, Wrocław, Poland, Tomasz.Grysinski@pwr.wroc.pl

Abstract – The four-point probe method, elaborated by van der Pauw, can be applied also in absolute measurements of electrical conductivity of electrolyte solutions. Conductance cells designed and used according to the method have their cell constant dependent on a single geometrical dimension only – the height. One of such designs, with electrodes located in chambers separated from the measuring space of the cell by narrow gaps, has especially advantageous properties as a calculable cell. This was presented in the previous works of the main author of this paper. The analysis performed there indicates that the consistency between theoretical and experimental results is limited by non-ideal properties of applied instrumentation rather than by the principle of the method. This paper presents later experimental examinations of the cell, carried out in the measuring arrangement improved on the basis of the conclusions presented in the former works. Absolute determinations of electrolytic conductivity of 0,01 and 0,1 kmol/m^3 NaCl solutions were performed. The results obtained confirm the hypothesis that the cell constant of such a cell can be determined from its height with uncertainty of the order of a few hundredths percent.

Keywords: electrolytic conductivity, van der Pauw method, absolute measurement

1. INTRODUCTION

Most liquids on the earth are electrolyte solutions. They conduct electrical current. The measure of their ability to do that is the electrical conductivity (electrolytic conductivity). It can be determined in two ways [1]: using a conductance cell of the known cell constant, determined experimentally using standards for electrolytic conductivity [2], or by an absolute method, using a conductance cell whose cell constant can be calculated theoretically from its geometrical dimensions [2][3]. This latter way can be realized e.g. according to the van der Pauw method [4], originally applied for determining the resistivity of semiconductor materials, later adapted also to electrolyte solutions [5][6]. The cell constant K of the cell designed and applied according to the van der Pauw theorem, with negligibly small electrodes located symmetrically at the cell circumference (fig. 1), can be calculated from a simple formula:

$$K = \ln 2 / (\pi h) \qquad (1)$$

where h is the height of the cell and κ is the electrical conductivity of the liquid filling the cell [2][4]. The shape of the cross-section of the cell may be arbitrary but the height must be uniform in the whole cell. When the electrodes are located asymmetrically, the cell constant can be calculated from the full van der Pauw equation:

$$\exp(-\pi h R_{AB,CD}\kappa) + \exp(-\pi h R_{BC,DA}\kappa) = 1 \qquad (2)$$

where $R_{AB,CD} = V_{CD}/I_{AB}$ – resistance of the solution measured when C, D are the potential electrodes and A, B are the current-carrying ones (Fig. 1), $R_{BC,DA} = V_{DA}/I_{BC}$ – analogous resistance when D, A are the potential electrodes and B, C are the current ones.

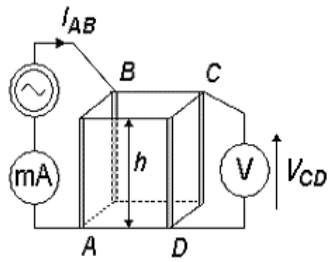

Fig. 1. The four-electrode measurement according to the van der Pauw method [3].

Investigations of the van der Pauw method applied for measuring electrical conductivity of electrolyte solutions were presented in earlier works of the first of the authors [3][6]. These works were focused mainly on the confirmation of the possibility of employing a calculable four-electrode conductance cell of such a type to substitute for the standards of electrolytic conductivity. The basic design of the cell was presented in [6] and its new, improved design in [3]. Continuation of those works, especially experimental ones, is the main objective of this paper.

Similar researches were also carried out by a research team, in France [7]. Although those works concerned only

the old design of the cell, some of the results obtained there can be very useful also in relation to the new one.

The problem of accurate determining electrolytic conductivity standards is still open, especially in the case of low conductivities [8][9]. And this is the main reason for carrying out the research presented in this paper.

2. THE OBJECT OF RESEARCH AND EXPERIMENTS

The authors' research group carried out previous examinations of the van der Pauw type cells realized in three variants: (i) with stripe electrodes inserted into a wall – an open vessel, (ii)as above but with the vessel closed at both ends [6] and (iii) with electrodes located in chambers separated from the measuring space of the cell by narrow gaps – a new design, shown in Fig. 2 and Fig. 3 [3]. All three cells were made up of polymethacrylate, all electrodes of stainless steel. In all cases the electrodes (or gaps) had very small width in comparison with the cell circumference. For the cell shown in Fig. 2 the influence of finite width of the gaps (virtual electrodes), evaluated according to [4] was below 0.06%. More details can be found in [10]. Just this cell is the main object of the research presented in this paper. Consistency between the cell constant value calculated and determined experimentally using 0,01 and 0,1 kmol/m^3 KCl and NaCl solutions, was considered the main criterion for evaluation of the cells. In case (i), the available consistency was not better than 0,5÷1%, because of evaporation and the influence of the meniscus. Cases (ii) and (iii) revealed consistency in the range 0,5% to 0,1%. The last solution has a number of advantageous features: electrodes are easily removable, they can have large surface areas, and the influence of electrode location and non-uniform electrode impedances can be very weak in terms of its impact on the results obtained. Performances of the cell depend mainly on the accuracy of machining the body of the cell.

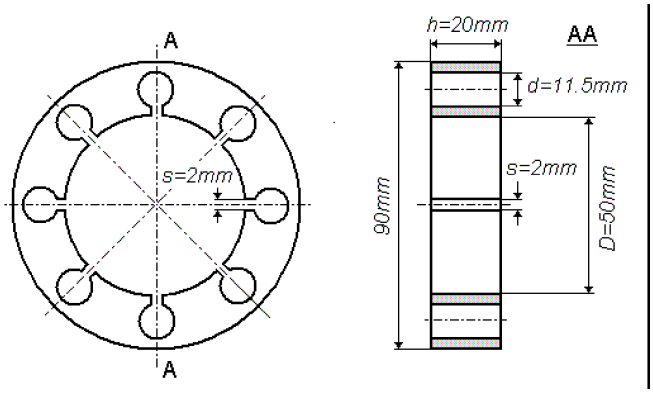

Fig. 2. The body of the cell of the new design: top view and cross-section ($\Delta h = \pm 0.05mm$) [10]. The body has eight chambers, however only four of them are used at the same time. Such design of the body was provided in order to enable the realization of unsymmetrical configurations.

All experiments were performed in conditions possibly close to those described in [3] and [6] – in order to verify the repeatability of the results obtained previously and confirm the hypotheses advanced in [3]. The same conductance cell of the new design, as described in [3] and [10] was applied – Fig. 3 and 4. All solutions were prepared from the portions of a sample delivered by the same supplier (according to the supplier the uncertainty of the weighted portions of NaCl sample is below ±0,2%) and the same precise glass thermometers were used for temperature measurement (the least division 0,01^{0}C and ±0,05^{0}C accuracy). Actually, three such thermometers were used and their read-outs were averaged.

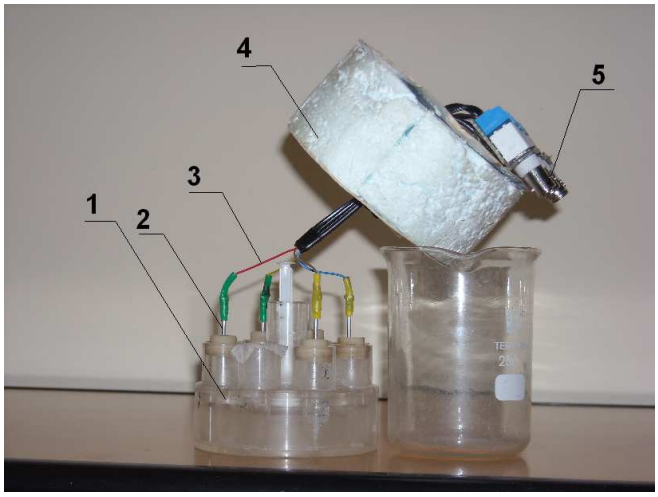

Fig. 3. The conductance cell under examination: 1 – polymethacrylate body, 2 – stainless steel needle electrode, 3 – connecting wire, 4 – thermal insulator, 5 – coaxial BNC connector. The cell height is 2 cm and its cell constant is 0,110318 cm^{-1}.

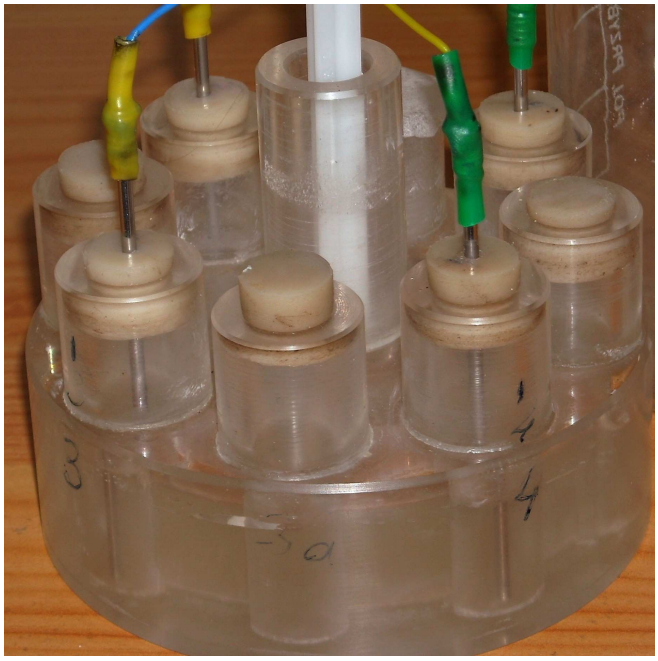

Fig. 4. Enlargement of the conductance cell under examination (the same as in Fig. 3) – the needle electrodes visible.

The main aim of the research performed was a further confirmation of the usefulness of the considered cell for

absolute determining of the electrolytic conductivity (to answer the question if such a cell can be applied as a new electrolytic conductivity standard, suitable for some applications). To this end, the electrolytic conductivity of 0,01 and 0,1 kmol/m^3 NaCl solutions was measured at 25^{0}C using the cell. Basically, KCl solutions are recommended as reference ones [1][2], however, the use of NaCl is specifically requested by clinical laboratories (when solution is made with NaCl of conductivity 20 mS/cm, the ionic strength of the solution approximates the ionic strength of the body fluid). Measurements of resistances were performed using the Solartron 1260 Impedance Analyzer and the cell was held in a water thermostat bath.

In [3] it was concluded that one of the important shortcomings of the experimental examinations performed there was a relatively large variability of the measured cell resistances in function of the measuring frequency, especially noticeable in the case of the 0,01 kmol/m^3 solution. One of the tests of quality of conductance cells is the ratio of the cell resistances measured for two concentrations of the solution applied, $S_{R0.01/R0.1} = R_{0.01}/R_{0.1}$ – this is presented in Fig. 5 as a function of measuring frequency, plot *a*. In the frequency range 30 Hz to 1000 Hz the spread of the $S_{R0.01/R0.1}$ ratio observed in [3] was about 0,24% The ratio should be the reciprocal of the solution conductivities (the reference value in Fig. 5) and independent of frequency. According to the hypothesis advanced in [3], variations of the four-electrode cell resistances observed as a function of the measuring frequency do not represent variations of the solution filling the cell itself. It is a joint effect of a number of factors: influence of the electrode polarisation impedances (both their components, resistive and capacitive, depend on frequency), influence of parasitic capacitances occurring in the measuring circuit and too low input resistance of the voltmeter.

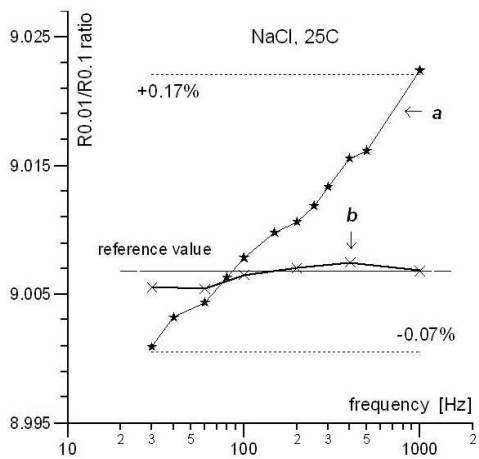

Fig. 5. Ratio of the resistances of the cell filled with of 0,01 and 0,1 kmol/m^3 NaCl solutions at 25^{0}C, as a function of frequency: measured – plot (*a*) and simulated after correction of the measuring circuit – plot (*b*), results obtained in [3].

To verify this hypothesis, the conductance cell, together with the whole measuring circuit used, was modelled by an electrical circuit of lumped parameters. The model was analyzed taking into account the actual parameters of the measuring circuit and also those obtained after minimizing the parasitic capacitances occurring in the measuring circuit. Plot *b* in Fig. 5 presents the $S_{R0.01/R0.1}$ ratio values obtained by simulation of the measuring circuit improved in the above mentioned way – it differs from its correct value by less than ±0.02% and is independent of frequency.

Results of the computer modelling indicated that one of the main causes of the observed variations in function of frequency was the influence of the parasitic capacitances occurring in the measurement circuit. Therefore, in this work, these capacitances were minimized by limiting to minimum the length of the cell leads and applying coaxial screened cables with BNC connectors matching the applied Solartron 1260 Impedance Analyzer – Fig. 6.

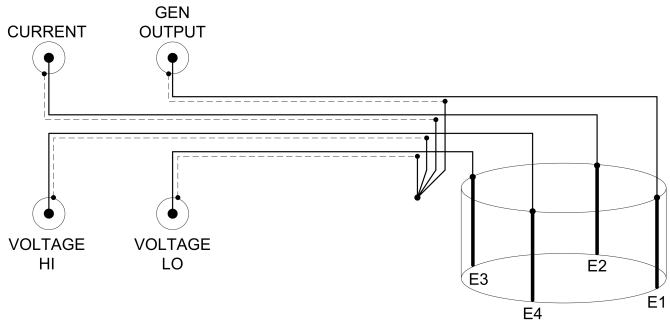

Fig. 6. The way of connecting the cell to the Solartron 1260 Impedance Analyser.

3. RESULTS AND DISCUSSION

Results of the carried out experiments, shown in Fig. 7 and Fig. 8, confirm the results of modelling of the cell together with the whole measuring circuit presented in [3]. The cell resistances, measured in the improved measurement circuit at various frequencies, indicate their inconstancy which is much lower than previously – Fig. 7 and 8. Even though the resistance values obtained in single measurements for particular electrode configurations differ from the theoretical values by more than ±1% (it may be attributed to asymmetric location of the gaps in the cell body – Fig. 2), the mean values of these resistances differ from the theoretical ones no more than, or about ±0.25%. The ratio of the cell resistances measured for both solutions applied is almost constant in function of frequency (its maximum variation is lower than 0,04% in the frequency range 20 Hz to 5kHz, i.e. wider than in [3]) – Fig. 9. Its discrepancy, in comparison with the reference (tabular) value 9,007, can be explained by uncertainties of the measurements performed, especially: uncertainty of determining the solution concentration, uncertainty of resistance measurements and uncertainty of temperature measurement.

Experimental verification of the results of the modelling performed in [3] was necessary because some of the model parameters were estimated rather roughly – this relates particularly to the impedance of electrode layer (it can be very large) [11].

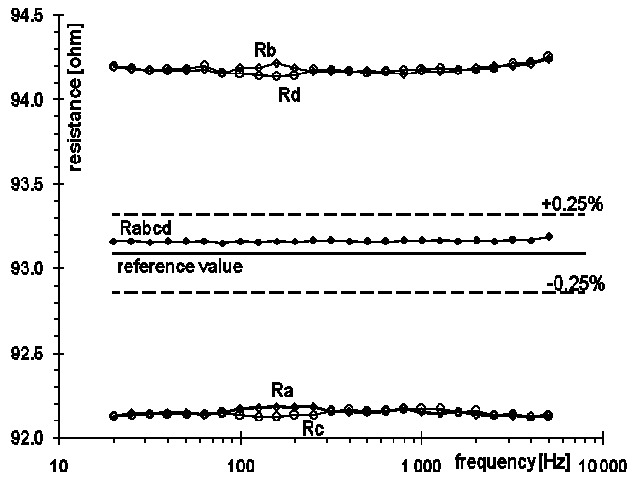

Fig. 7. Resistances of the cell filled with of 0,01 kmol/m^3 NaCl solution measured at 25^{0}C as a function of frequency (R_a, R_b, R_{ac}, R_{ad} – particular electrode configurations, R_{abcd} – mean resistance value calculated according to the van der Pauw method).

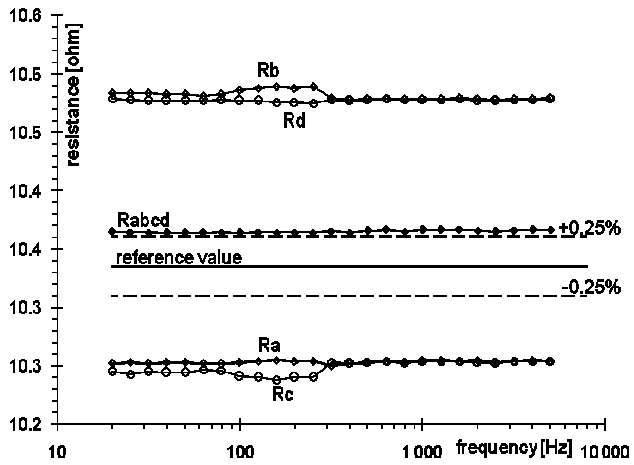

Fig. 8. Resistance of the cell filled with 0,1 kmol/m^3 NaCl solution measured at 25^{0}C as a function of frequency (R_a, R_b, R_{ac}, R_{ad} – particular electrode configurations, R_{abcd} – mean resistance value calculated according to the van der Pauw method).

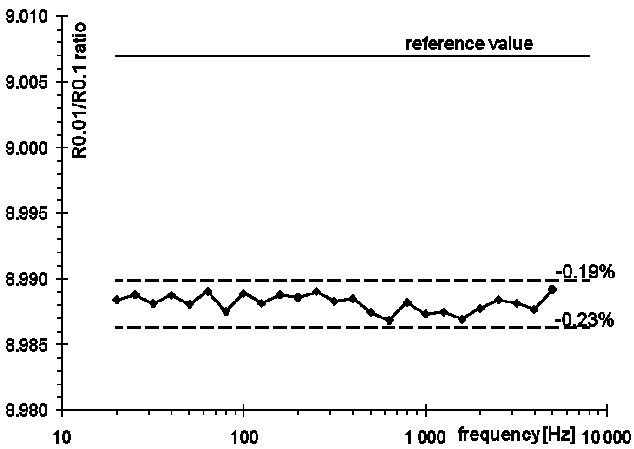

Fig. 9. Ratio of the resistances of the cell filled with 0,01 and 0,1 kmol/m^3 NaCl solutions, measured at 25^{0}C as a function of frequency.

4. CONCLUSIONS

The results obtained confirm undoubtedly the hypothesis that the cell constant of the cell under consideration can be determined from its height with the uncertainty better than it was previously obtained. The limited accuracy obtained before was caused mostly by non-ideal properties of the measuring circuit and the applied instrumentation rather than by the principle of the method. Continuation of the research is required, with further improvement of the experimental workshop (e.g. more accurate determining of the solution concentration and temperature, higher input impedance of the voltage measuring device, etc.). Further modelling will also be very helpful.

The cell in question can be especially useful for determining very low conductivities, i.e. 10 µS/cm and less [8]. The use of the calculable cell is more convenient than the application of standard solutions of low conductivity (no problem with dissolved CO_2, no necessity for temperature compensation, etc.). Such a cell could be used for calibration of other conductivity cells and also low conductivity meters, without necessity of using standard solutions. Therefore, experiments with solutions of much lower conductivities are required. For this purpose, a cell of much larger height (much lower cell constant value) should be designed.

The cell has another advantageous feature, i.e that together with height increases the area of the electrode surface (the ratio of the polarization resistance to the electrolyte solution resistance remains constant).

The results of modelling performed in [7] indicate that sloping location of the electrodes can result in a major error. The cell of the new design, with chambers and gaps, should not have that shortcoming. However, it needs to be confirmed by further modelling and experiments.

REFERENCES

[1] IEC, "Expression of performance of electrochemical analyzers, Part 3: Electrolytic conductivity", IEC Publication 607046, July 2002

[2] R. H. Shreiner, K. W. Pratt, Standard Reference Materials: Primary Standards and Standard Reference Materiale for Electrolytic Conductivity, NIST Special Publication 260-142, 2004

[3] Z. Moroń, Investigations of van der Pauw method applied for measuring electrical conductivity of electrolyte solutions: Measurement of electrolytic conductivity, *Measurement*, Vol. 33, Issue 3, April 2003, pp. 281–290

[4] L.J. van der Pauw, A method of measuring specific resistivity and Hall effect of discs of arbitrary shape, *Philips Research Reports.*, vol. 13, 1958, p. 1-9

[5] Y. Ohta, A. Miyanaga, K. Morinaga, Study on the measuring method of the electrical conductivity of ionic solutions and melts, *J. Japan Inst. Metals*, vol. 45, No 10, 1981, p. 1036-1043

[6] Z. Moroń, Z. Rucki, Z. Szczepanik, The possibility of employing a calculable four-electrode conductance cell to substitute for the secondary standards of electrolytic conductivity, *IEEE Trans. IM* 46 (6) (1997) 1268–1273.

[7] S. Daveau, R. Philippe, C. River, H. Cachet, M. Keddam and H. Takenouti, Bancs de reference primaries pour les

measures de conductivitie electrique des solutions, *Research report (Laboratoire National de Metrologie et d'Essais and Universite Pierre et Marie Curie)*, Paris, France, 2005

[8] M. Gingerella, J. J. Jacanin, Is there an accurate low-conductivity standard solution?, Cal Lab, International Journal of Metrology, July-August 2000, pp 29-36

[9] J. J. Barron, C. Ashton, Conductivity Measurement – Do you comply with the pharmacopoeias?, TSP-03 Issue 4, Reagecon Diagnostics Ltd, Shannon Free Zone, County Clare, Ireland

[10] Z. Moroń, *Measurements of electrical conductivity of liquids at low frequencies* (in Polish), Oficyna Wydawnicza Politechniki Wrocławskiej, Wrocław 2003 (http://www.dbc.wroc.pl/)

[11] Z. Moroń, Considerations on the accuracy of measurements of electrical conductivity of liquids, IMEKO XVIII World Congress and IV Brazilian Congress of Metrology. Metrology for a sustainable development, Rio de Janeiro, September 17-22, 2006.